MINGZHU VALVE 明珠阀门

上海明珠阀门制造有限公司
SHANGHAI MINGZHU VALVE MFG.CO.,LTD.

阀门样本 >>>
VALVE STYLEBOOK

※ 闸阀系列
GATE VALVE SERIES

楔式闸阀
WEDGE GATE VALVE

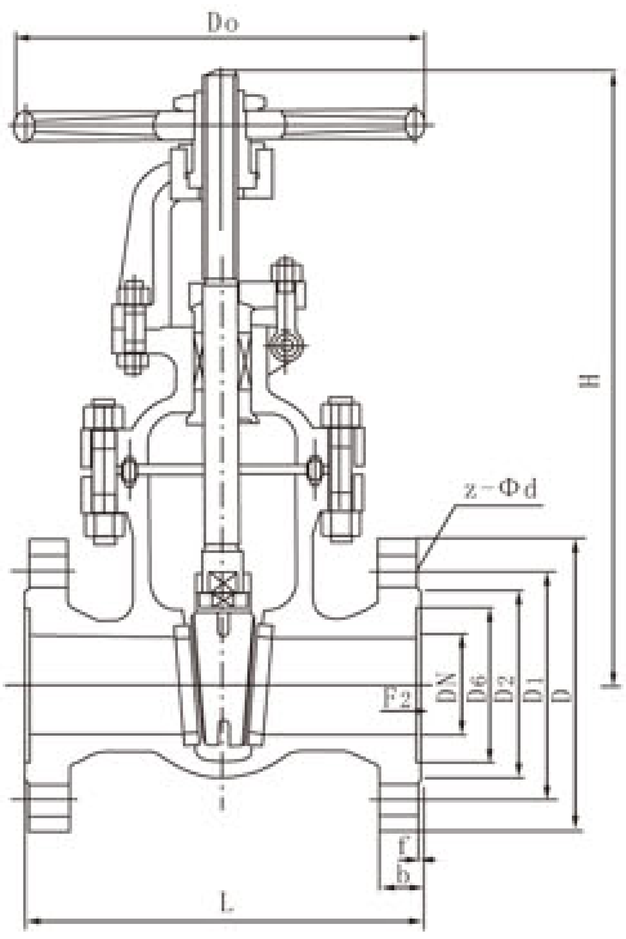

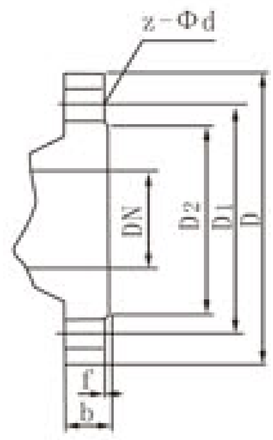

PN1.6MPa-25MPa

1.Compact structure, reasonable design, good rigidity, smooth channel, small coefficient of flow resistance.
2.The sealing face uses stainless steel and hard alloy and is of long duration
3.Using flexible graphite fillings, reliable sealing, light and simple operation.
4. Four driving ways: manually, electrically, pneumatically and gear driving;
Structure type: flexible single wedge disc, rigid single wedge disc and double gate disc.
5. Widely used as switching device for medium switching on and off in water, oil goods and steam pipeline of industries such as petroleum,chemical and thermal power plant and so on.

设计、制造标准 Standard for design and manufacture

1. 设计制造按GB/T 12234-89
2、法兰连接尺寸按JB/T 79-94
3、阀门检查和试验按GB/T 13927-92
1、Design Manafacfure According to GB/T 12234-89
2、Flange Dimension According toJB/T 79-94
3、valve Check and Test According to GB/T 13927-92

主要零件材料 Materials for main parts

阀体，阀盖 Body, bonnet	闸板，阀座 Wedge disc, seat ring	阀杆 Stem	阀杆螺母 Yoke nut	填料 Packing	手轮 Hand wheel
碳素钢 Carbon steel	优质碳钢＋硬质合金或不锈钢 High-grade carbon steel+hard alloy or stainless steel	铬不锈钢 Cr.stainless steel	ZQAL 9-4 铝青铜 Al bronze	柔性石墨 Flexible graphite	可锻铸铁 Forgable cast-iron
铬镍钛钢 Cr. Ni. Ti steel	不锈钢＋硬质合金 Stainless steel +hard alloy	铬镍钛不锈钢 Cr.Ni.Ti stainless steel	ZQAL 9-4 铝青铜 Al bronze	浸聚四氟乙烯 Dipping polytetrafluo-rcethylene	可锻铸铁 Forgable cast-iron
铬镍钼钛钢 Cr. Ni. Mo. Ti steel	不锈钢＋硬质合金 Stainless steel +hard alloy	铬镍钼钛不锈钢 Cr.Ni.Mo.Ti stainless steel	ZQAL 9-4 铝青铜 Al bronze	烯石棉盘根 Asbestos coil	可锻铸铁 Forgable cast-iron
铬钼钢 Cr. Mo steel	合金钢＋硬质合金 Alloy steel+hard alloy	铬钼铝钢 Cr.Mo.Al steel	ZQAL 9-4 铝青铜 Al bronze	柔性石墨 Flexible graphite	铬钼可锻铸铁 Cr.Mo. forgable cast-iron

主要特点及用途 Main characteristics and application

1. 结构紧凑，设计合理，阀门刚性好，通道流畅，流阻系数小。
2. 密封面采用不锈钢和硬质合金，使用寿命长。
3. 采用柔性石墨填料，密封可靠，操作轻便灵活。
4. 驱动方式分别有手动，电动，气动，齿轮传动，结构形式：弹性楔式单闸，刚性楔式单闸板和双闸板形式。
5. 广泛适用于石油，化工，火力发电厂等油品，水，蒸汽管路上作接通或截断管路中介质的启闭装置。

主要性能规范 Main property and specification

试验压力 Test pressure

公称压力 PN(MPa) Nominal pressure	试验压力(MPa)Test pressure			
	壳体 Shell	密封(液) Seal (liquid)	密封(气) Seal (gas)	上密封 Back seat
1.6	2.4	1.76	0.6	1.76
2.5	3.8	2.75	0.6	2.75
4.0	6.0	4.4	0.6	4.4
6.4	9.6	7.04	0.6	7.04
10.0	15.0	11.0	0.6	11.0
16.0	24.0	17.6	0.6	17.6

适用范围 Suitable scope

壳体材料 Shell material	适用介质 Applicable medium	适用温度℃ Applicable temperature
碳素钢(C型) Carbon steel (C type)	水、蒸气、油品 water,steam, oil goods	≤425
铬镍钛钢(P型) Cr. Ni. Ti. Steel (P type)	硝酸类 Nitric adid	≤200
铬镍钼钛钢（R型） Cr. Ni. Mo. Ti. steel (R type)	醋酸类 Acetic acid	≤200
铬钼钢(I型) Cr. Mo. steel (I type)	水、蒸气、油品 water,steam, oil goods	≤550

主要连接及外形尺寸 Main connection and external dimensions(mm)

公称通径DN(mm) Nominal diameter	主要外形尺寸和连接尺寸(mm) Main external and connecting dimensions									
	L	D	D_1	D_2	b	f	z-Φd	H	H_1	D_0
	Z40 H Z41 Y Z42 Y－16C		Z40 Y Z41 W－16P Z42 H		Z40 W Z41 Y－16R Z42 H		Z40 H Z41 Y Z42 Y－16 I			
15	130	95	65	45	14	2	4-Φ14	220	240	120
20	150	105	75	55	14	2	4-Φ14	255	284	140
25	160	115	85	65	14	2	4-Φ14	275	303	160
32	180	135	100	78	16	2	4-Φ18	280	321	180
40	200	145	110	85	16	3	4-Φ18	300	352	200
50	250	160	125	100	16	3	4-Φ18	358	438	240
65	265	180	145	120	18	3	4-Φ18	375	450	240
80	280	195	160	135	20	3	8-Φ18	433	528	280
100	300	215	180	155	20	3	8-Φ18	502	620	320
125	325	245	210	185	22	3	8-Φ18	612	753	360
150	350	280	240	210	24	3	8-Φ23	676	847	360
200	400	335	295	265	26	3	12-Φ23	820	1039	400
250	450	405	355	320	30	4	12-Φ25	969	1245	450
300	500	460	410	375	30	3	12-Φ25	1142	1472	560
350	550	520	470	435	34	4	16-Φ25	1280	1450	640
400	600	580	525	485	36	4	16-Φ30	1452	1887	640
450	650	640	585	545	40	4	20-Φ30	1541	2011	720
500	700	705	650	608	44	4	20-Φ34	1676	2181	720
600	800	840	770	718	48	5	20-Φ41	1874	2346	800
700	900	910	840	788	50	5	24-Φ41	2139	2819	880
800	1000	1020	950	898	52	5	24-Φ41	2293	3043	980
900	1100	1120	1050	998	54	5	28-Φ41	2595	3445	1080
1000	1200	1255	1170	1110	56	5	28-Φ48	2733	3683	1180
1200	1350	1485	1390	1325	58	5	32-Φ54	3032	4100	1300
	Z40 H Z41 Y Z42 Y－25C		Z40 Y Z41 W－25P Z42 H		Z40 W Z41 Y－25R Z42 H		Z40 H Z41 Y Z42 Y－25 I			
15	130	95	65	45	16	2	4-Φ14	220	240	120
20	150	105	75	55	16	2	4-Φ14	255	284	140
25	160	115	85	65	16	2	4-Φ14	275	303	160
32	180	135	100	78	18	2	4-Φ18	280	321	180
40	200	145	110	85	18	3	4-Φ18	300	352	200
50	250	160	125	100	20	3	4-Φ18	358	438	240
65	265	180	145	120	22	3	8-Φ18	375	450	240
80	280	195	160	135	22	3	8-Φ18	433	528	280
100	300	230	190	160	24	3	8-Φ23	502	620	320
125	325	270	220	188	28	3	8-Φ25	612	753	360
150	350	300	250	218	30	3	8-Φ25	676	847	360
200	400	360	310	278	34	3	12-Φ25	820	1039	400
250	450	425	370	332	36	3	12-Φ30	969	1245	450
300	500	485	430	390	40	4	16-Φ30	1142	1472	560
350	550	550	490	448	44	4	16-Φ34	1280	1450	640
400	600	610	550	505	48	4	16-Φ34	1452	1887	640
450	650	660	600	555	50	4	20-Φ34	1541	2011	720
500	700	730	660	610	52	4	20-Φ41	1676	2181	720
600	800	840	770	718	56	5	20-Φ41	1874	2346	800
700	900	955	875	815	60	5	24-Φ48	2139	2819	880
800	1000	1070	990	930	64	5	24-Φ48	2293	3043	980

主要连接及外形尺寸 Main connection and external dimensions(mm)

公称通径DN(mm) Nominal diameter	主要外形尺寸和连接尺寸(mm)Main external and connecting dimensions											
	L	D	D_1	D_2	D_6	b	f	F_2	z-Φd	H	H_1	D0
	Z40 Z41 Z42 H Y－40			Z40 Z41 Z42 H Y－40P W		Z40 Z41 Z42 H Y－40R W			Z40 Z41 Z42 H Y－40 I			
20	150	105	75	55	51	16	2	4	4-Φ14	256	285	140
25	160	115	85	65	58	16	2	4	4-Φ14	275	305	160
32	180	135	100	78	66	18	2	4	4-Φ18	287	322	180
40	200	145	110	85	76	18	3	4	4-Φ18	323	369	200
50	250	160	125	100	88	20	3	4	4-Φ18	372	440	280
65	280	180	145	120	110	22	3	4	8-Φ18	395	473	280
80	310	195	160	135	121	22	3	4	8-Φ18	457	552	320
100	350	230	190	160	150	24	3	4.5	8-Φ23	552	671	360
125	400	270	220	188	176	28	3	4.5	8-Φ25	634	726	400
150	450	300	250	218	204	30	3	4.5	8-Φ25	708	883	400
200	550	375	320	282	260	38	3	4.5	12-Φ30	858	1086	450
250	650	445	385	345	313	42	3	4.5	12-Φ34	1015	1298	560
300	750	510	450	408	364	46	4	4.5	16-Φ34	1203	1535	640
350	850	570	510	465	422	52	4	5	16-Φ34	1341	1678	640
400	950	655	585	535	474	58	4	5	16-Φ41	1492	1903	720
	Z40 Z41 Z42 H Y－64			Z40 Z41 Z42 H Y－64P W		Z40 Z41 Z42 H Y－64R W			Z40 Z41 Z42 H Y－64 I			
20	190	125	90	68	51	20	2	4	4-Φ18	258	288	180
25	210	135	100	78	58	22	2	4	4-Φ18	310	314	200
32	230	150	110	82	66	24	2	4	4-Φ23	320	353	200
40	240	165	125	95	76	24	3	4	4-Φ23	360	389	240
50	250	175	135	105	88	26	3	4	4-Φ23	372	448	280
65	280	200	160	130	110	28	3	4	8-Φ23	395	475	280
80	310	210	170	140	121	30	3	4	8-Φ23	458	553	320
100	350	250	200	168	150	32	3	4.5	8-Φ25	553	679	360
125	400	295	240	202	176	36	3	4.5	8-Φ30	638	779	400
150	450	340	280	240	204	38	3	4.5	8-Φ34	718	893	450
200	550	405	345	300	260	44	3	4.5	12-Φ34	873	1100	560
250	650	470	400	352	313	48	3	4.5	12-Φ41	1053	1332	640
300	750	530	460	412	364	54	4	4.5	16-Φ41	1203	1535	640
	Z40 Z41 Z42 H Y－100			Z40 Z41 Z42 H Y－100P W		Z40 Z41 Z42 H Y－100R W			Z40 Z41 Z42 H Y－100I			
25	210	135	100	78	58	24	2	4	4-Φ18	310	341	200
32	230	150	110	82	66	24	2	4	4-Φ23	320	353	240
40	240	165	125	95	76	26	3	4	4-Φ23	360	389	280
50	250	195	145	112	88	28	3	4	4-Φ25	490	558	360
65	280	220	170	138	110	32	3	4	8-Φ25	540	622	400
80	310	230	180	148	121	34	3	4	8-Φ25	573	671	400
100	350	265	210	172	150	38	3	4.5	8-Φ30	575	671	400
125	400	310	250	210	176	42	3	4.5	8-Φ34	744	892	560
150	450	350	290	250	204	46	3	4.5	12-Φ34	800	972	560
200	550	430	360	312	260	54	3	4.5	12-Φ41	800	972	560
250	650	500	430	382	313	60	3	4.5	12-Φ41	1050	1305	640
300	750	585	500	442	364	70	4	4.5	16-Φ48	1208	1506	640
	Z40 Z41 Z42 H Y－160			Z40 Z41 Z42 H Y－160P W		Z40 Z41 Z42 H Y－160R W			Z40 Z41 Z42 H Y－160 I			
15	170	110	75	52	40	24	2	4	4-Φ18	230	250	200
20	190	130	90	62	51	26	2	4	4-Φ23	260	288	200
25	210	140	100	72	58	28	2	4	4-Φ23	280	310	280
32	230	165	115	85	66	30	2	4	4-Φ25	312	350	320
40	240	175	125	92	76	32	3	4	4-Φ27	350	395	320
50	300	215	165	132	88	36	3	4	8-Φ25	512	612	360
65	340	245	190	152	110	44	3	4	8-Φ30	560	677	360
80	390	260	205	168	121	46	3	4	8-Φ30	585	686	400
100	450	300	240	200	150	48	3	4.5	8-Φ34	631	751	450
125	525	355	285	238	176	60	3	4.5	8-Φ41	723	868	560
150	600	390	318	270	204	66	3	4.5	12-Φ41	820	997	640
200	750	480	400	345	260	78	3	4.5	12-Φ48	990	1224	720

注：Z40为楔式弹性闸板，Z41为楔式钢性闸板，Z42为楔式双闸板。
Note: Z40 is flexible wedge gate disc, Z41 is rigid wedge gate disc,and Z42 is wedge double gate disc.

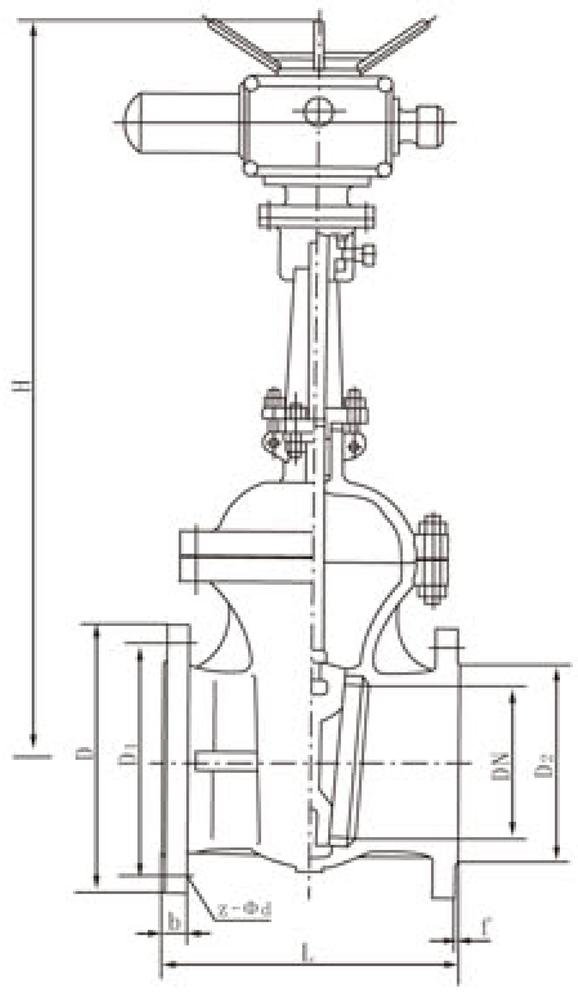

PN1.6～2.5MPa
连接法兰 Flange

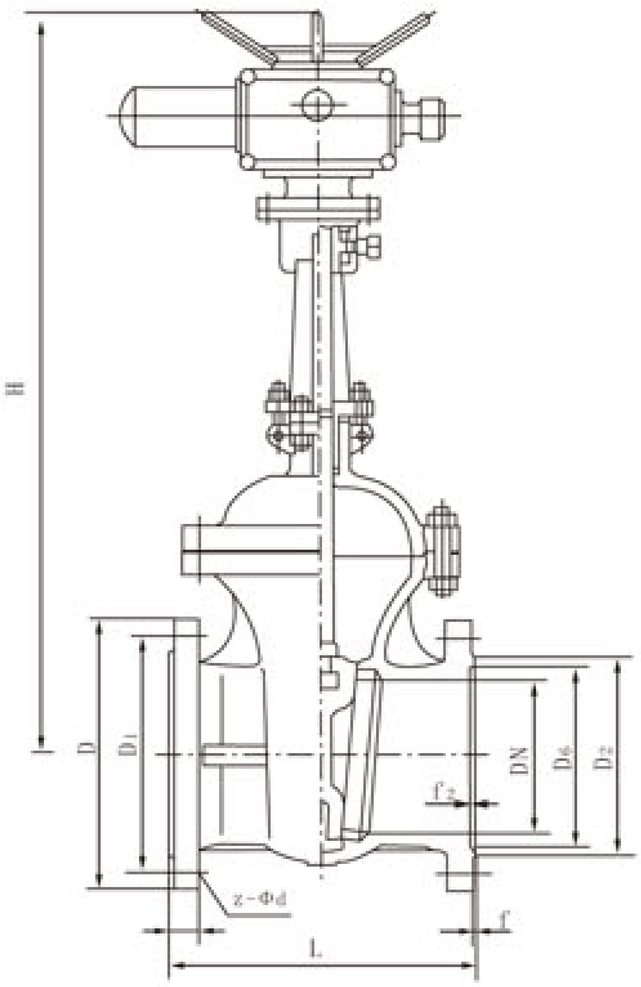

PN≥4.0MPa
连接法兰 Flange

主要连接及外形尺寸 Main connection and external dimensions(mm)

公称通径DN(mm) Nominal diameter	L	D	D_1	D_2	b	f	z-Φd	H	电动装置型号 Electric actuator model
	Z940 Z941 Z942	H Y-16C	Z940 Z941 Z942	W Y-16P H	Z940 Z941 Z942	W Y-16R H	Z940 Z941 Z942	H Y-16 I	
40	200	145	110	85	16	3	4-Φ18	595	ZB15
50	250	160	125	100	16	3	4-Φ18	653	ZB15
65	265	180	145	120	18	3	4-Φ18	665	ZB15
80	280	195	160	135	20	3	8-Φ18	725	ZB15
100	300	215	180	155	20	3	8-Φ18	787	ZB15
125	325	245	210	185	22	3	8-Φ18	806	ZB20
150	350	280	240	210	24	3	8-Φ23	955	ZB20
200	400	335	295	265	26	3	12-Φ23	1105	ZB40
250	450	405	355	320	30	3	12-Φ25	1343	ZB40
300	500	460	410	375	30	4	12-Φ25	1516	ZC45
350	550	520	470	435	34	4	16-Φ25	1678	ZC45
400	600	580	525	485	36	4	16-Φ30	1849	ZC90
450	650	640	585	545	40	4	20-Φ30	1937	ZC90
500	700	705	650	608	44	4	20-Φ34	2234	ZC120
600	800	840	770	718	48	5	20-Φ41	2432	ZC180
700	900	910	840	788	50	5	24-Φ41	2489	ZC250
800	1000	1020	950	898	52	5	24-Φ41	2643	ZC350
900	1100	1125	1050	998	54	5	28-Φ41	2945	ZC500
1000	1200	1255	1170	1110	56	5	28-Φ48	3083	ZC500
1200	1350	1485	1390	1325	58	5	32-Φ54	3382	ZC800
1400	1500	1685	1590	1525	60	5	36-Φ54	3718	ZC1000

主要连接及外形尺寸 Main connection and external dimensions(mm)

公称通径DN(mm) Nominal diameter	L	D	D_1	D_2	b	f	z-Φd	H	电动装置型号 Electric actuator model
Z940 H Z941 Y-25 Z942			Z940 W Z941 Y-25P Z942 H		Z940 W Z941 Y-25R Z942 H		Z940 Z941 Y-25 I Z942		
40	200	145	110	85	18	3	4-Φ18	595	ZB15
50	250	160	125	100	20	3	4-Φ18	653	ZB15
65	265	180	145	120	22	3	8-Φ18	665	ZB15
80	280	195	160	135	22	3	8-Φ18	725	ZB15
100	300	230	190	160	24	3	8-Φ23	787	ZB20
125	325	270	220	188	28	3	8-Φ25	902	ZB20
150	350	300	250	218	30	3	8-Φ25	955	ZB20
200	400	360	310	278	34	3	12-Φ25	1105	ZB40
250	450	425	370	332	36	3	12-Φ30	1343	ZB40
300	500	485	430	390	40	4	16-Φ30	1516	ZC60
350	550	550	490	448	44	4	16-Φ34	1678	ZC60
400	600	610	550	505	48	4	16-Φ34	1849	ZC90
450	650	660	600	555	50	4	20-Φ34	1937	ZC90
500	700	730	660	610	52	4	20-Φ41	2234	ZC120
600	800	840	770	718	56	5	20-Φ41	2432	ZC180
700	900	955	875	815	60	5	24-Φ48	2489	ZC250
800	1000	1070	990	930	64	5	24-Φ48	2643	ZC350

注：DN700．DN800的型号为Z942型　Note：model of DN700 .DN800 is type Z942

主要连接及外形尺寸 Main connection and external dimensions(mm)

公称通径DN(mm) Nominal diameter	L	D	D_1	D_2	D_6	b	z-Φd	f	f_2	H	电动装置型号 Electric actuator model
Z940 H Z941 Y-40 Z942			Z940 W Z941 Y-40P Z942 H			Z940 W Z941 Y-40R Z942 H		Z940 H Z941 Y-40I Z942			
40	200	145	110	85	76	18	4-Φ18	3	4	617	ZB15
50	250	160	125	100	88	20	4-Φ18	3	4	665	ZB15
65	280	180	145	120	110	22	8-Φ18	3	4	680	ZB15
80	310	195	160	135	121	22	8-Φ18	3	4	752	ZB15
100	350	230	190	160	150	24	8-Φ23	3	4.5	846	ZB20
125	400	270	220	188	176	28	8-Φ25	3	4.5	908	ZB20
150	450	300	250	218	204	30	8-Φ25	3	4.5	1087	ZB40
200	550	375	320	282	260	38	12-Φ30	3	4.5	1243	ZB40
250	650	445	385	345	313	42	12-Φ34	3	4.5	1429	ZC45
300	750	510	450	408	364	46	16-Φ34	4	4.5	1608	ZC60
350	850	570	510	465	422	52	16-Φ34	4	5	1738	ZC90
400	950	655	585	535	474	58	16-Φ41	4	5	1897	ZC120
450	1050	680	610	560	524	60	20-Φ41	4	5	2104	ZC180
500	1150	755	670	612	576	62	20-Φ48	4	5	2401	ZC180

主要连接及外形尺寸 Main connection and external dimensions(mm)

公称通径DN(mm) Nominal diameter	L	D	D_1	D_2	D_6	b	z-Φd	f	f_2	H	电动装置型号 Electric actuator model
Z940 H Z941 Y -64 Z942			Z940 H Z941 Y -64P Z942 W			Z940 H Z941 Y-64R Z942 W			Z940 H Z941 Y -64 I Z942		
50	250	175	135	105	88	26	4-Φ23	3	4	667	ZB15
65	280	200	160	130	110	28	8-Φ23	3	4	685	ZB15
80	310	210	170	140	121	30	8-Φ23	3	4	748	ZB20
100	350	250	200	168	150	32	8-Φ25	3	4.5	845	ZB20
125	400	295	240	202	176	36	8-Φ30	3	4.5	920	ZB20
150	450	340	280	240	204	38	8-Φ34	3	4.5	1009	ZB40
200	550	405	345	300	260	44	12-Φ34	3	4.5	1253	ZC60
250	650	470	400	352	313	48	12-Φ41	3	4.5	1449	ZC60
300	750	530	460	412	364	54	16-Φ41	4	4.5	1867	ZC90
350	850	595	525	475	422	60	16-Φ41	4	5	1913	ZC120
400	950	670	585	525	474	66	16-Φ48	4	5	2017	ZC180
500	1150	800	705	640	576	70	20-Φ54	4	5	2459	ZC250
Z940 H Z941 Y -100 Z942			Z940 W Z941 Y -100P Z942 H			Z940 W Z941 Y -100R Z942 H			Z940 H Z941 Y -100 I Z942		
50	250	195	145	112	88	28	4-Φ25	3	4	781	ZB15
65	280	220	170	138	110	32	8-Φ25	3	4	830	ZB15
80	310	230	180	148	121	34	8-Φ25	3	4	865	ZB20
100	350	265	210	172	150	38	8-Φ30	3	4.5	1179	ZB40
125	400	310	250	210	176	42	8-Φ34	3	4.5	1198	ZC45
150	450	350	290	250	204	46	12-Φ34	3	4.5	1201	ZC60
200	550	430	360	312	260	54	12-Φ41	3	4.5	1611	ZC90
250	650	500	430	382	313	60	12-Φ41	3	4.5	1903	ZC90
300	750	585	500	442	364	70	16-Φ48	4	4.5	2054	ZC120
350	850	655	560	498	422	76	16-Φ54	4	5	2132	ZC180
400	950	715	620	558	474	80	16-Φ54	4	5	2321	ZC250
Z940 H Z941 Y -160 Z942			Z940 W Z941 Y -160P Z942 H			Z940 W Z941 Y -160R Z942 H			Z940 H Z941 Y -160 I Z942		
50	300	215	165	132	88	36	8-Φ25	3	4	905	ZB20
65	340	245	190	152	110	44	8-Φ30	3	4	968	ZB20
80	390	260	205	168	121	46	8-Φ30	3	4	978	ZB40
100	450	300	240	200	150	48	8-Φ34	3	4.5	1043	ZC45
125	525	355	285	238	176	60	8-Φ41	3	4.5	1248	ZC60
150	600	390	318	270	204	66	12-Φ41	3	4.5	1394	ZC90
200	750	480	400	345	260	78	12-Φ48	3	4.5	1621	ZC120

注：根据用户需要可提供气动和齿轮传动闸阀产品

Z41为楔式钢性闸板，Z40为楔式弹性闸板，Z42为楔式双闸板。

Note: product of both pneumatic and gear driving gate valves can be supplied per users' requirement

Z41 is rigid wedge disc; Z40 is elastic wedge disc, and Z42 is double wedge disc.

平板闸阀
PLATE GATE VALVE

结构说明 Structure instruction:

1. 阀座为镶嵌PTFE或填充PTFE密封圈的刚性浮动阀座，具有双重密封效果，阀座由端部O型圈施加予紧力，并由浮动阀座的活塞效应达到进出口同时密封，这种双重密封结构使阀体中腔与通道完全隔离，可以在工作状态下检修阀门，排除体腔内残留物。
2. 闸板为－长方形平行平板，其上开－与通道直径相同的通孔(带导流孔），也可不开孔（不带导流孔)，全启时，通道平滑为直管段，流阻系数低，压力损失小,开启与关闭时闸板与阀座始终相互接触，即可擦试附着在密封面间的颗粒污物，又可使密封面不被介质直接冲刷而得到保护。
3. 阀杆与闸板采用“T”形槽连接；
4. 扁体阀门中法兰采用金属柔性石墨垫片，圆体阀门中法兰采用O型密封圈密封；
5. 密封面处设有油封装置，紧急状态下可旋紧注脂器注入密封脂以保证密封的绝对可靠；
6. 阀门为全封闭式，并在阀盖上端部设有开度指示器，可随时指示阀门的启闭式状态与高度；
7. 阀杆、阀座和闸板等零件表面都经过特殊的热处理（MoS_2）；
8. 阀体底部和阀盖上部均设有泄压装置，既可排放脏物，又可排放由于温升等原因造成的升压；
9. 手轮顺时针转动为关闭，反之为开启。

1.The valve seat is the rigid floating one inlayed or filled with PTFE sealing ring with double sealing effect realizing the synchronous sealing at both inlet and outlet via the tension from the O-ring at the top of valve seat and the piston effect of the floating valve seat. This double sealing structure completely separates the valve cavity from the bore so that make it possible to examine and repair the valve under working condition and remove the leftover in body cavity.

2.The disc is an oblong parallel flat plate, on which a through hole (with deflector) is available with the same diameter of bore and not necessary if not required. In the state of fully open, smooth bore is a straight pipe with low flow resistance and small pressure loss. Disc always keeps connecting with valve seat whenever it is open or closed, so that the granule dirt stuck on sealing surface can be cleaned up and meanwhile the sealing surface be kept from directly eroding by medium.

3. T type groove connection between valve stem and disc.

4. The flange in the flat valve adopts metal soft graphite spacer and the flange in the round valve adopts O sealing ring for sealing.

5. There is oil seal device on sealing surface. In emergency condition, you may screw filling greaser and inject sealing grease so as to assure absolutely reliable sealing.

6. Valve is the fully enclosed type. On the upper end of the bonnet, there is an opening position indicator which can indicate the state of open & close and height of valve at any time.

7. All part surfaces of valve stem, seat, disc and etc have been processed through special heat treatment.

8. Pressure release devices set on the bottom of valve body and the top of the valve cover separately can not only discharge dirt, but also release the rising pressure due to temperature rise and other causes.

9. Close the valve by turning the handwheel clockwise and open on the contrary.

设计、制造标准

1. 设计制造按GB/T 12234-89
2、法兰连接尺寸按JB/T 79-94
3、阀门检查和试验按GB/T 13927-92

Standard for design and manufacture

1、Design Manufacfure According to GB/T 12234-89
2、Flange Dimension According to JB/T 79-94
3、Valve Check and Test According to GB/T 13927-92

压力试验 Pressure test

压力等级 Pressure level		常温下试验压力（MPa） Test pressure (MPa) under normal temperature				工作压力（MPa） Working pressure
		液体密封 Liquid seal	气体密封 Gas seal	壳体强度 Shell strength	气体低压密封 Gas seal at low pressure	
公称压力 PN(MPa) Nominal pressure	1.6	1.76	1.76	2.4	0.6	1.6
	2.5	2.75	2.75	3.75		2.5
	4	4.4	4.4	6		4

基本型号规格及压力 Basic model, specification and pressure

常用基本型号 Basic model					密封材料代号 Code of sealing material	公称压力PN Nominal pressure
	手动 Manual	伞齿轮传动 Bevel gear drive	气动 Pneumatic	电动 Electric		
法兰式 Flange type	Z43(type)型	Z543(type)型	Z643(type)型	Z943(type)型	F 增强聚四氟乙烯 F: Reinforced polytetrafluoroethylene D 渗氮钢 D: Nitriding steel H 合金钢 H: Alloy steel Y 硬质合金 Y: Hard alloy	1.6～4MPa
	Z44(type)型	Z544(type)型	Z644(type)型	Z944(type)型		公称通径DN Nominal diameter
	Z47(type)型	Z547(type)型	Z647(type)型	Z947(type)型		50～500mm
特殊型号 Special model	Z前加K抗硫阀门 Add K before Z refers to anti-sulfur valve Z前加RQ，燃气 Add RQ before Z refers to combustion gas					

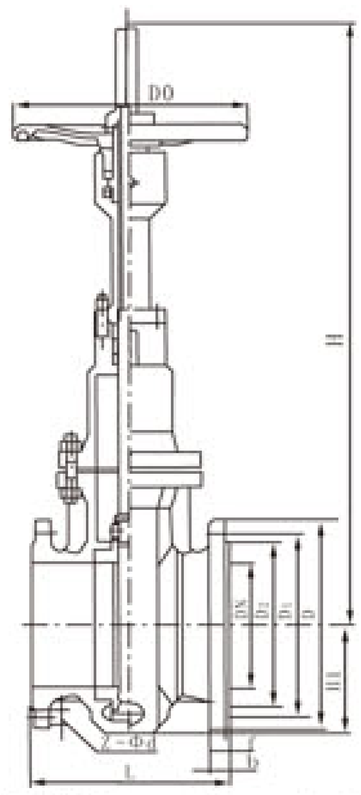

无导流孔(Without defletor hole)

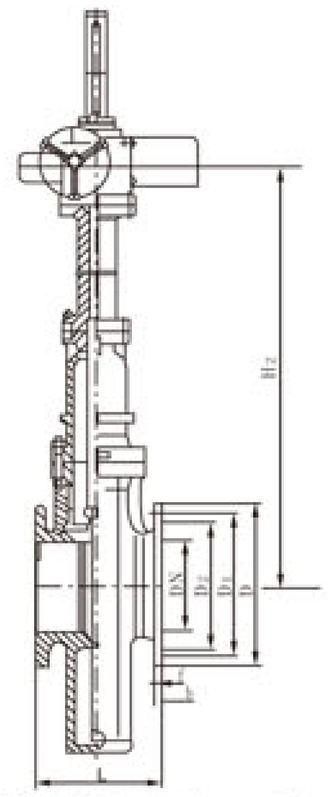

带导流孔(With defletor hole)

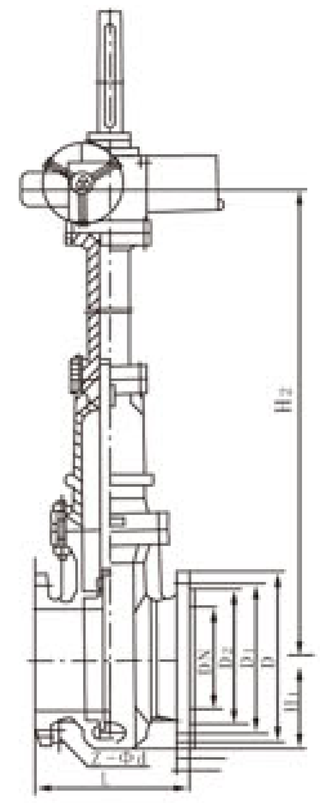

主要连接及外形尺寸 Main connection and external dimensions(mm)

PN	DN	L	H	H_1	H_2	D	D_1	D_2	b	f	Z-Φd	D0
1.6 (MPa)	50	178	415	85		160	125	100	16	3	4-Φ18	220
	65	190	540	95		180	145	120	18	3	4-Φ18	250
	80	203	560	110		195	160	135	20	3	8-Φ18	250
	100	229	685	125		215	180	155	20	3	8-Φ18	300
	125	254	860	140		245	210	185	22	3	8-Φ18	320
	150	267	875	165		280	240	210	24	3	8-Φ23	350
	200	292	1080	190		335	295	265	26	3	12-Φ23	350
	250	330	1360	225		405	355	320	30	3	12-Φ25	400
	300	356	1495	255	1330	460	410	375	30	4	12-Φ25	500
	350	381	1700	265	1510	520	470	435	34	4	16-Φ25	600
	400	406	1950	295	1700	580	525	485	36	4	16-Φ30	
	450	432	2250	325	2000	640	585	545	40	4	20-Φ30	
	500	457	2465	335	2150	705	650	608	44	4	20-Φ34	
	600	508	2680	425	2800	840	770	718	48	4	20-[illegible]Φ	
	700	610	3080	455	3200	910	840	788	50	4	24-Φ41	
2.5 (MPa)	50	178	415	85		160	125	100	20	3	4-Φ18	220
	80	203	530	110		195	160	135	22	3	8-Φ18	250
	100	229	692	125		230	190	160	24	3	8-Φ23	300
	150	267	875	165		300	250	218	30	3	8-Φ25	350
	200	292	1080	190		360	310	278	34	3	12-Φ25	350
	250	330	1360	225		425	370	332	36	3	12-Φ30	400
	300	356	1495	255	1330	485	430	390	40	4	16-Φ30	500
	350	381	1700	290	1510	550	490	448	44	4	16-Φ34	600
	400	406	1950	330	1700	610	550	505	48	4	16-Φ34	
	450	432	2250	350	2000	660	600	555	50	4	20-Φ34	
	500	457	2465	380	2150	730	660	610	52	4	20-Φ41	
	600	508	2680	425	2800	840	770	718	56	4	20-Φ41	
	700	610	3080	455	3200	955	875	815	60	4	25-Φ4[illegible]	
4.0 (MPa)	50	216	415	85		160	125	100	20	3	4-Φ18	220
	80	283	530	110		195	160	135	22	3	8-Φ18	250
	100	305	692	125		230	190	160	24	3	8-Φ23	300
	150	403	895	165		300	250	218	30	3	8-Φ25	350
	200	419	1080	190		375	320	282	38	3	12-Φ30	350
	250	457	1360	225		445	385	345	42	3	12-Φ34	400
	300	502	1495	255	1300	510	450	408	46	4	16-Φ34	500
	350	762	1700	330	1510	570	510	465	52	4	16-Φ34	600
	400	838	1950	370	1700	655	585	535	58	4	16-Φ41	
	450	914	2250	400	2000	680	610	560	60	4	20-Φ41	
	500	991	2465	440	2150	755	670	612	62	4	20-Φ48	
	600	1143	2680	425	2800	890	795	730	62	4	20-Φ5[illegible]	

平板闸阀
PLATE GATE VALVE

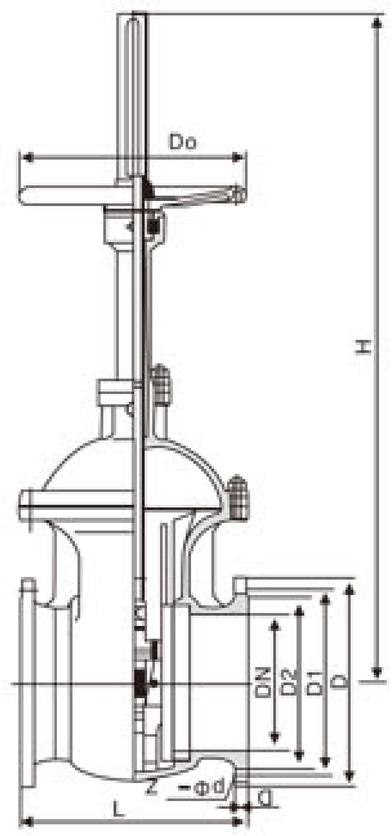

主要连接及外形尺寸 Main connection and external dimensions(mm)

产品型号 Product Model	公称通径 Nominal Diameter	PN1.0MPa								
		L	D	D_1	D_2	b	z-Φd	H	D0	WT(kg)
Z44WF-16C Z44WY-16C KZ44WF-16C	25	127	115	85	65	14	4-Φ14	280	200	9
	32	140	135	100	78	16	4-Φ18	322	200	12
	40	165	145	110	85	16	4-Φ18	380	250	16
	50	178	160	125	100	16	4-Φ18	415	250	26
	65	190	180	145	120	18	4-Φ18	470	300	38
Z544WF-16C Z544WY-16C KZ544WF-16C	80	203	195	160	135	20	4-Φ18	540	300	46
	100	229	215	180	155	20	4-Φ18	605	350	62
	125	325	245	210	185	22	8-Φ18	785	350	96
Z6s44WF-16C Z6s44WY-16C KZ6s44WF-16C	150	350	280	240	210	24	8-Φ23	925	350	132
	200	400	335	295	265	26	12-Φ23	1125	350	220
	250	450	405	355	320	30	12-Φ25	1350	450	355
Z9B44WF-16C Z9B44WY-16C KZ9B44WF-16C	300	500	460	410	375	30	12-Φ25	1485	500	490
	350	550	520	470	435	34	16-Φ25	1705	550	810
	400	600	580	525	485	36	16-Φ30	1870	600	930
	450	650	640	585	545	40	20-Φ30	2185	800	1230
	500	700	705	650	608	44	20-Φ34	2335	800	1727
	600	800	840	770	718	48	20-Φ41	2680	1000	2514

主要连接及外形尺寸 Main connection and external dimensions(mm)

产品型号 Product Model	公称通径 DN	PN1.0MPa								
		L	D	D_1	D_2	b	z-Φd	H	D0	WT(kg)
Z44WF-25 Z44WY-25 KZ44WF-25	25	127	115	85	65	16	4-Φ14	280	200	9
	32	140	135	100	78	18	4-Φ18	322	200	12
	40	165	145	110	85	18	4-Φ18	380	250	16
	50	178	160	125	100	20	4-Φ18	415	250	26
	65	190	180	145	120	22	8-Φ18	470	300	38
Z544WF-25 Z544WY-25 KZ544WF-25	80	203	195	160	135	22	8-Φ18	540	300	46
	100	229	230	190	160	24	8-Φ23	605	350	62
	125	325	270	220	188	28	8-Φ25	785	350	96
	150	350	300	250	218	30	8-Φ25	925	350	132
Z6s44WF-25 Z6s44WY-25 KZ6s44WF-25	200	400	360	310	278	34	12-Φ25	1125	350	220
	250	450	425	370	332	36	12-Φ30	1350	450	355
	300	500	485	430	390	40	16-Φ30	1485	500	490
Z9B44WF-25 Z9B44WY-25 KZ9B44WF-25	350	550	550	490	448	44	16-Φ34	1705	550	810
	400	600	610	550	505	48	16-Φ34	1870	600	930
	450	650	660	600	555	50	20-Φ34	2185	800	1230
	500	700	730	660	610	52	20-Φ41	2335	800	1727
	600	800	840	770	718	56	20-Φ41	2680	1000	2514

主要连接及外形尺寸 Main connection and external dimensions(mm)

产品型号 Product Model	公称通径 Nominal Diameter	PN1.0MPa								
		L	D	D_1	D_2	b	z-Φd	H	D0	WT(kg)
Z44WF-40 Z44WY-40 KZ44WF-40	25	165	115	85	65	16	4-Φ14	280	200	9
	32	178	135	100	78	18	4-Φ18	322	200	13
	40	190	145	110	85	18	4-Φ18	380	250	17
	50	216	160	125	100	20	4-Φ18	415	250	27
	65	241	180	145	120	22	8-Φ18	470	300	40
Z544WF-40 Z544WY-40 KZ544WF-40	80	285	195	160	135	22	8-Φ18	540	300	48
	100	305	230	190	160	24	8-Φ23	605	350	65
	125	381	270	220	188	28	8-Φ25	785	350	101
	150	403	300	250	218	30	8-Φ25	925	350	139
Z6s44WF-40 Z6s44WY-40 KZ6s44WF-40	200	419	375	320	282	38	12-Φ30	1125	350	231
	250	157	445	385	345	42	12-Φ34	1350	450	373
	300	502	510	450	408	46	16-Φ34	1485	500	515
Z9B44WF-40 Z9B44WY-40 KZ9B44WF-40	350	762	570	510	465	52	16-Φ34	1705	550	851
	400	838	655	585	535	58	16-Φ41	1870	600	977
	450	914	680	610	560	60	20-Φ41	2185	800	1292
	500	991	755	670	612	62	20-Φ48	2335	800	1813
	600	1143	890	795	730	62	20-Φ54	2680	1000	2640

浆液闸阀
LIQUID SLURRY GATE VALVE

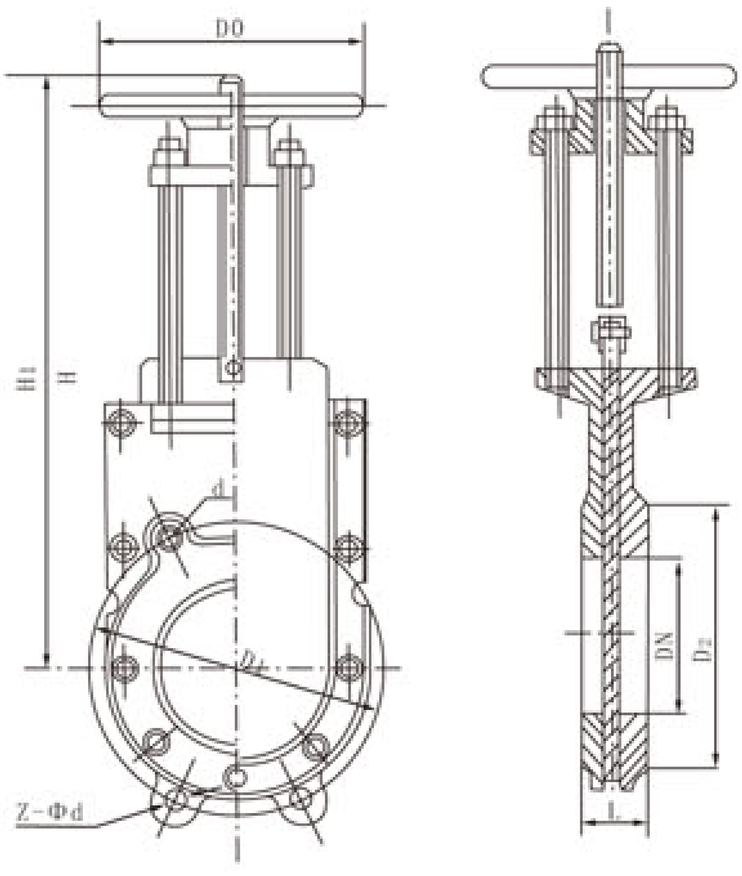

设计、制造标准

1. 设计制造按JB/T 8691-98
2、结构长度按GB/T 15188.2-94
3、法兰连接尺寸按GB/T 9113-2000
4、阀门检查和试验按GB/T 13927-92

Standard for design and manufacture

1、Design Manufacfure According to JB/T 8691-98
2、Face to Face According to GB/T 15188.2-94
3、Flange Dimension According to GB/T 9113-2000
4、Valve Check and Test According to GB/T 13927-92

主要性能规范 Main property and specification

型 号 Model	公称压力MPa Nominal pressure	试验压力Test pressure MPa		适用温度 Applicable temperature	适用介质 Applicable medium
		阀体强度试压 Pressure test for body strength	密封面试压 Pressure test of sealing face		
Z73X-6	0.6	0.9	0.66	≤120℃	煤浆、糖浆、纸浆、泥浆、污水、矿渣 coal liquid, sirup, pulp, slop, sewage, slag
Z73X-10	1.0	1.5	1.1		

主要零件材料 Materials for main parts

名 称 Description	阀体 Valve body	闸板 Wadge disc	密封圈 Sealing ring	阀杆 Valve stem	填 料 Filling	阀杆螺母 Yoke nut
材 料 Material	灰铸铁 Gray cast-iron	不锈钢 Stainless steel	合成橡胶 Synthetic rubber	不锈钢 Stainless steel	聚四氟乙烯 Polytetrafluoroethylene	黄 铜 Brass

主要连接及外形尺寸 Main connection and external dimensions(mm)

型 号 Model	公称通径 DN(mm) Nominal Diameter	Dimensions 尺 寸 (mm)						
		L	D_1	D_2	Z-Φd	D0	H	H_1
Z73X-6/10	50	40	125	100	4-Φ18	240	296	347
	65	40	145	120	4-Φ18	240	301	367
	80	50	160	135	4-Φ18	240	326	410
	100	50	180	155	8-Φ18	280	374	476
	125	50	210	185	8-Φ18	280	414	541
	150	60	240	210	8-Φ23	360	488	650
	200	60	295	265	8-Φ23	360	553	754
	250	70	350	320	12-Φ23	400	695	945
	300	80	400	368	12-Φ23	400	796	1097
	350	92	460	428	16-Φ23	400	895	1245
	400	120	515	482	16-Φ25	400	1285	1455
	450	120	565	532	20-Φ25	400	1380	1650
	500	132	620	585	20-Φ25	400	1420	1796
	600	132	725	685	20-Φ30	400	1540	2010

上海明珠阀门制造有限公司
SHANGHAI MINGZHU VALVE MFG.CO.,LTD.

厂址：上海市奉贤区金汇镇工业大道1111号
ADD:No.1111 Industry Road Jinhui Town, Fengxian County. Shanghai, China
电话(TEL)：021-57482386　　57483788
传真(FAX)：021-57482872
邮编(P.C)：201404
网络实名：上海明珠阀门
http://www.mingzhu-valve.com
E-mail:mzfm6688@163.com

中国进出口商品检验总公司质量认证中心　中石化物资资源市场成员　中石油一级供应网络成员　国家电力　合同信用等级认证　中国人民保险产品责任保险　中国阀门协会成员

以上产品资料仅供参考，如有参数改动本公司恕不另行通知并不承担法律责任。